Volume 63, Issue 03

March 2012

Mecklenburg Amateur Radio Society, Inc

MARS News

Inside this issue:

A Letter from the President 1

SVHFS 2

Dr. Bill 6

Editorial 12

Feb Club Meeting 14

Mar Board Meeting 16

News from the President, March 2012

March, 2012

Message from the Prez....

Well I hope everyone enjoyed themselves at the Charlotte Hamfest. I would like to extend a big thank you to Barry May -KC4SSS and the very able Hamfest committee for putting on another great hamfest, this all despite poor economic conditions.

The final figures will be presented to the membership around the end of April or beginning of May. It seemed to me that the crowds were about the same as last year, especially in the flea market area which seemed to be doing a booming business. The forums were well attended as was the Ladies Bingo session. I had not heard any comments on the VEC session so I am assuming all went well. The next step now is to start preparing for next years Hamfest. We will be looking for all kinds of new ideas to make it more enticing for the local ham community to come and visit with the Mecklenburg Amateur Radio society and the 2013 Charlotte Hamfest.

The next big event is looming just over the horizon; that is the ARRL sponsored Field day activities on June 23rd and 24th out at the Belk Scout Camp in Mint Hill. I aim to have another practice field day run sometime in late April. I will announce time and date when known.

We have another public service event that will take place in the beginning of May, weather permitting. This will be the MS walk around the South Park area of Charlotte. Mary will be looking for volunteers for SAGS, Rest Stop Communications etc.

I am pleased to say that the club has found a location to hold Amateur Radio classes; this will enable us to proceed forward with starting a Technician class. We are presently trying to establish how to advertise this to prospective amateurs. If you have any ideas please do not hesitate to speak up.

I believe we are off to a good start for the year and I look forward to continuing the trend throughout the year.

Finally I would like to recognize Earl Fortner – K4KAY, Bryan Ferdinand – K4NET and the rest of the repeater committee for the improvements made to the W4BFB repeaters, a job well done and very much appreciated.

73

Andy Hawkins – K4GKK

Southeastern VHF Society's 16th Annual Conference

April 20 & 21

For the third time this millennium, Charlotte will be the host city of the Southeastern VHF Society's (SVHFS) Conference. On the third weekend in April, (20 & 21) the VHF world's attention will be focused on the sixteenth annual SVHFS conference, coming to The Doubletree hotel in Charlotte. **Charlotte mayor Anthony Foxx has proclaimed Friday April 20th as VHF Ham Radio Day in Charlotte**. There are many activities packed into the 2 day conference including antenna gain testing, noise figure testing, 2 days of technical programs, fleamarket / auction, DXCC / VUCC card checking and luncheon and dinner speakers.

American Radio Relay League (ARRL) President Kay Craigie, N3KN, will be the Friday luncheon speaker. Kay was first licensed in 1983, she enjoys DXing -- that's what attracted her to ham radio in the first place -- award-hunting, and contesting. She holds VUCC on 6 meters, 5BDXCC (endorsed for 12, 17, and 30 meters), the DXCC Challenge award, WAZ, and WAE Class 1 CW. She enjoys digital modes such as RTTY and PSK31, as well as CW and phone.

The highlight of the conference is the Saturday evening dinner banquet with featured speaker, American astrophysicist and 1993 Nobel Prize in Physics laureate, Dr Joseph H Taylor K1JT.

Joe received the Nobel prize for his discovery with Russell Alan Hulse of a "new type of pulsar, a discovery that has opened up new possibilities for the study of gravitation."

Joe first obtained his amateur radio license as a teenager, which led him to the field of radio astronomy. He has held the callsigns K2ITP, WA1LXQ, W1HFV, and VK2BJX In April 2010, Joe used the Arecibo Radio Telescope to make moonbounce (EME), contacts using voice, Morse Code, and digital communications. He is the author of WSJT, a weak signal VHF digital protocol using weak signal modes like EME, meteor scatter (MS).

In Geneva, on February 3, Joe K1JT, addressed the 2012 World Radiocommunication Conference where he shared his vision of the future of radiocommunications. Joe was presented with the International Telecommunication Union (ITU) Gold Medal in recognition of his outstanding contribution to the research in the field of radiocommunications.

Not only will Joe be our dinner speaker, but he will also participate in an ARRL VHF-UHF Advisory Committee (VUAC) panel discussion.

For more information please visit the conference website http://www.svhfs.org/conference.html

Hope to see you there..

antenna testing tent

Rover vehicle

HK0NA Malpelo DX Forum

This years DX forum was the first public presentation of the HK0NA Malpelo Dxpedition, from January 2012. Team Co-leader Bob K4UEE shared the story of the planning, logistics required to make HK0NA a successful DXpedition.

Malpelo is an 900 foot tall primitive mountain island off the coast of Colombia, that is uninhabited except for a small team of Colombian military personnel. For best results they operated from 2 separate locations, one at 600 feet elevation and another on the summit at 900 feet elevation. This was a DXpedition for the record books, as they made over 193,000 QSO's.

After the formal presentation Bob K4UEE was joined by team co-leader Greg W6IZT for a question and answer session.

For more information, please visit the DXpeditions website at http://hkona.com/ .

The Island

Pics From the Hamfest forum

Power supplies…. Switcher vs. Linear

So you've decided to buy a power supply but now have to make a decision. What type of regulation do I want? Let me try to help by explaining the difference between the two and the advantages and disadvantages of each. Then you can decide.

Difference:

Linear Supply Operation

The Linear regulator supply uses the 120V AC line and a transformer to reduce that voltage to a lower secondary voltage of about 24 volts. This lower voltage is then rectified using a full wave bridge rectifier and a large (>10000uF) capacitor to remove most of the AC hum. (Since it's full wave the hum frequency is 120Hz). This creates the bulk DC voltage of about 33.6 Volts. This bulk DC is then applied to a group of NPN transistors all in parallel. The number of transistors depends on the current capability of the supply. Typically one transistor is used for every 5-7 Amps of capacity.

The bulk DC is connected to the collectors of each of the transistors. A regulator board that usually has an integrated circuit power supply regulator chip (LM 723) and a transistor pre-drive circuit, over current detection and over voltage detection circuits is located in the power supply case. The regulator chip, samples the output of the power supply at the terminals and controls the voltage of the base of the pre-drive transistor. This transistor is connected to the bases of all the BIG NPN transistors located on the heat sink in the back of the supply.

The basic theory is this. The voltage of the emitter of an NPN transistor is 0.7 volts LOWER than the voltage of the base when the transistor is operational. If the regulator chip controls the voltage of the base of the pre-drive transistor to 1.4 volts higher than what we want at the output, the voltage at the base of the big NPN transistors will be 0.7 volts higher than then output. If we design the supply to deliver 13.6 Volts out, the base of the big transistors will be 14.3 and the output of the regulator chip will be 15.0. The regulator circuit uses fixed resistors and an adjustable resistor to monitor the supply output voltage and adjust the voltage to the base of the pre-drive to keep the output at 13.6 Volts. I won't go into detail on how the overcurrent or overvoltage circuits work in this column. We may cover these at a later date. The schematic in Figure 1 roughly represents the linear supply circuit.

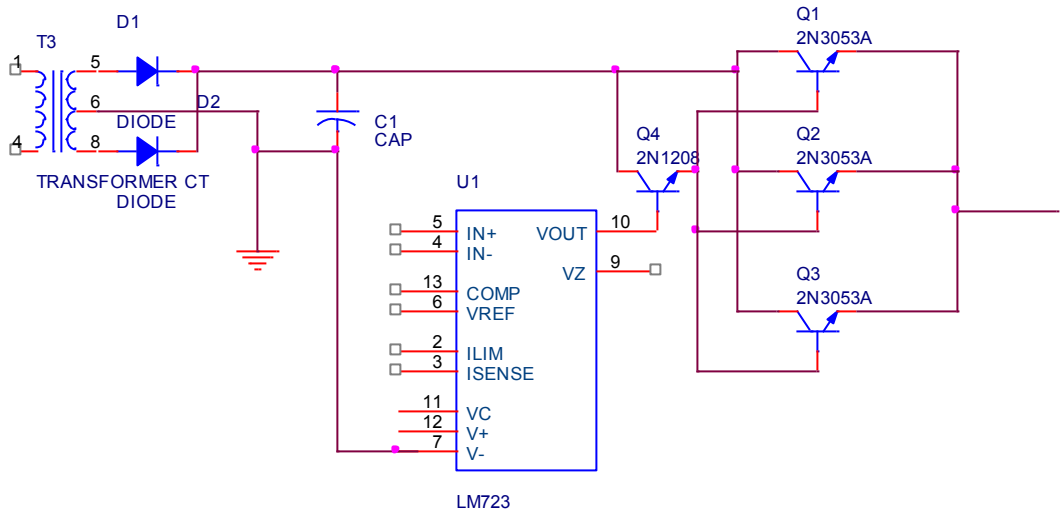

Figure 1 Linear Schematic

So, the key point on the linear supply is that all the current from the output, comes directly from the secondary voltage (33.6 in this example). For a 30 Amp supply, the rectifier diodes must be capable of 30 Amps and the transformer must be able to supply 30 Amps on the secondary side. The capacitor must be large since the frequency of the "hum" is only 120 Hz. The transformer must have a lot of iron in it to transform the power, hence it has to be HEAVY.

The good point is that linear power supplies are relatively inexpensive. They are simple to repair.

Switching Supply Operation:

A switching supply has no big transformer. The 120V AC line is rectified immediately creating a bulk DC of 168 Volts. This bulk DC is then applied to usually a pair of Field Effect Transistors (FETs) which are controlled by a switching regulator integrated circuit. These FETs are turned on and off at a high frequency (c 40,000Hz) so that it is above the frequency you can hear. This creates an Alternating Current waveform of 168Volts at 40KHz that is then applied to a transformer to create the lower voltage (20 V) which is then rectified and filtered (capacitor and inductor) and applied directly to the output terminals. Since this transformer operates at 40KHz, the iron required is much less than that of the linear. This is often a toroid transformer.

Now for the regulation part, the regulator monitors the output voltage. During startup, the regulator turns the FETS on and off at full frequency until the output voltage comes up to the limit. It then stops switching the transistors. This stops the 168V AC signal and the output voltage will drop if there is a load on it. When the output voltage goes below the set point, the regulator starts turning on and off the FETs thus creating the 168V AC signal and applying more energy to the output. Below is a rough schematic of a switching power supply.

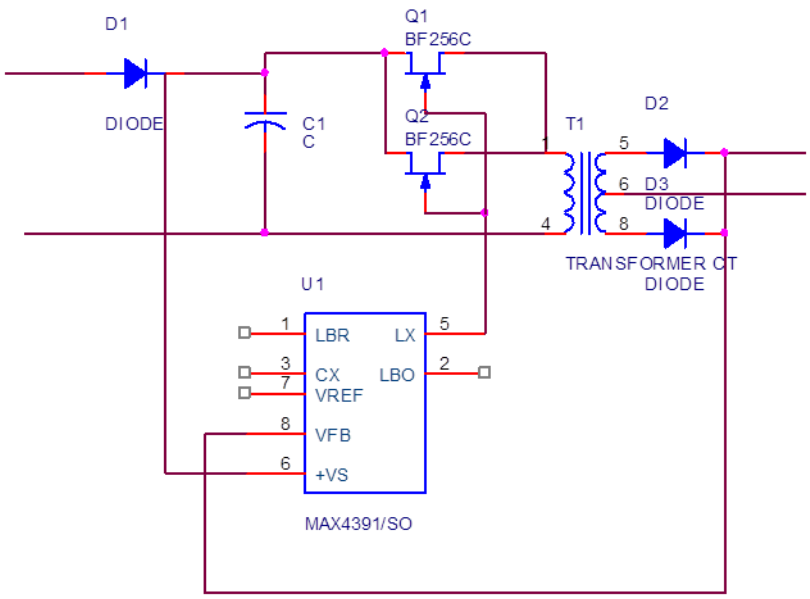

Figure 2 Switching Supply

The key point to the effectiveness of the switcher is that it is really controlling POWER not voltage or current. With the frequencies high, the size of the magnetics required to transfer the power from one level to another are much smaller (and lighter).

The main advantage of the switcher is that it is much lighter than the linear supply. The electronics is more complex since it has transistors that switch relatively high voltages and two stages of rectification (120V AC - DC, secondary 20V AC-DC). The capacitors can be much smaller since the frequencies are so high. This results in the primary advantage, SIZE. Switching supplies are small and light.

Reliability:

There is a lot of discussion about the reliability of each. They both have problems but I've not seen a leader in reliability. There is definitely more electronics in the switcher and they are more complex to fix. There is more heat in the linear supply and this often leads to failing transistors. The best way to improve reliability is to run the supply well under rated power. If you have a 30A supply, keep the nominal current under 20A. Either switcher or linear will give you long life.

Summary:

Let's compare the two and see in a table form what we've got:

Type	Weight	Size	Cost
Linear	Heavy	Large	Low
Switching	Light	Small	High

I hope to continue this column for months to come but I need you to submit your technical questions to the newsletter editor. Just send her an email with the subject “Ask Dr. Bill”.

See you next time…

Bill Heybruck, Ph.D. (EE – Wireless in case you were wondering) WA2EDN

Announcements and News

REPEATER TIME-OUT

Three years ago the repeater committee was exploring options to replace all of W4BFB's repeaters and upgrade antennas and other equipment related to their operation. Money was the only problem. We explored getting federal grant's but the club did not meet the necessary requirements.
At that time Dr. Bill Heybruck (WA2EDN) was working on the timing traps and devices for the Carolina Cycling Time Trials Association (CCTTA); an organization that holds time trials for cyclist five or six times a year at the Lowes Motor Speedway. Bill is a member and cycles also. It turns out they needed marshals to monitor riders on the track to prevent illegal advantages such as drafting and provide communications to report infractions and accidents that require medical attention. Dr Bill and I came up with a plan where he would be the liaison for the CCTTA and I would represent W4BFB. A deal was worked out where the club would provide six marshals around the track for six races. At the end of the season they would donate $600 to the club. As it turned out the CCTTA and cyclists loved it. The CCTTA presented a $1000 donation at the last race and has done so each year since.

That said, this money has been set aside for new repeater equipment. Three new Kenwood TKR-750 VHF and one Kenwood TKR-850 repeaters have been purchased. Two of the VHF units are on the air at Spencer Mountain and Orr Rd tower sites. The other VHF and UHF repeaters are scheduled to go on the Wells Fargo Building soon after the hamfest.

We have also purchased three Arcom 210 repeater controllers. Bryan Ferdinand and I have been working together setting these up and getting them up and running. It has been huge learning curve getting it all going. Bill, WA2EDN has donated DB-9 and DB25 connectors and hoods, Mike, N4ILK donated cable. I would like to thank all the other members on the repeater committee for their time attending meetings to make decisions choosing the Arcom 210 controllers.

The controllers have been set up to provide a five minute warning announcement before the Nets and a message at the time of the Net announcing the Net is open. There are many features with these controllers that may be used as were learn more about them. They have also been set to time out at five minutes if you don't wait for the courtesy tones. Should you will hear three short beeps during someone's transmission, five seconds later it will quit transmitting until the input signal has stopped for at least 30 seconds. Then it will operate normally. There is NO notice given for when the normal operation has resumed (e.g. ID). The controller also has a kerchunk filter installed. The repeater itself also has a time out and it is reset when the carrier drops so periodically let the courtesy tone beep AND let the carrier drop. This is also a good way to let others join your conversation.

I will make an effort to provide more articles about our repeaters and what makes them work and provide some input for the newsletter editor. I suggest others do the same to keep the newsletter going. Sandra needs your help before the deadline.

Earl Fortner, K4KAY
Repeater, committee chairman

Print Form

Mecklenburg Amateur Radio Society
W4BFB

Membership Application/Renewal/Info Form

New Membership ☐ Membership Renewal ☐ Information Update ☐

Individual ($20.00 per year*) ☐ Student/Non-Student over 65 ($14.00 per year**) ☐
Family Membership (over all those in family) ($25.00 per year***) ☐ Family membership (65+) ($19.00 per year****) ☐

PLEASE NOTE:>>>>>>>>>>>>(For Renewal or Update: Please - CIRCLE ANY CHANGED items)<<<<<<<<<<<

Name _____ Address _____

City _____ State _____ Zip Code _____

Phone: Home _____ Work(optional) _____
>>>>>Permission to Display Phone Number in Club Roster? Yes

Internet E-mail Address _____
>>>>>Permission to Display Email Address

Callsign(s) _____
>>>>>Is this a

Renew now for 2012

...membership/

...the Club Door lock combination!

...(or online)

...Other: _____

...amateur radio. An Amateur Radio license is not required for membership. Only ... radio license may vote in society elections; only members over 18 years of age may become a club ... Every current member is notified when a new newsletter is available via email. Only current society members ... equipment, following a checkout and instruction session, and they are responsible to comply with and subject to FCC rules ... >>>>>Members must notify the club secretary of address, phone, and/or email changes.<<<<<

MARS holds a regular meeting monthly. See http://www.W4BFB.org for information about the scheduling and location.

To be a MARS member, you must submit a completed application/membership/dues form and pay the annual dues required. Your appropriate MARS dues amount may be determined by consulting the membership options below.

The annual membership year is from January 1st thru December 31st.

*Any licensed Amateur less than 65: the lesser of $20.00, or $2.00 per full month remaining in the then current membership year.
**Any licensed Amateur OVER 65, any licensed Amateur UNDER 18, any unlicensed person (non-voting Associate) membership: the lesser of $14.00 or $1.50 per full month remaining in the then current membership year.
***All licensed Amateurs <65 residing at one address: the lesser of $25 or $2.25 per full month left in the then current membership year.
****All licensed Amateurs (65+) residing at one address: the lesser of $19 or $1.60 per full month left in the then current membership year.

With the submitting of this application, and appropriate dues, I do hereby agree to abide by the by—Laws and Standing Rules of the Society and the Constitution and Regulations of the Federal Communications Commission.

Signature: _____ Cell: _____ Date: _____

Make check payable to Mecklenburg Amateur Radio Society, Inc. and send to:
Tom Hunt – KJ4YWJ – MARS Treasurer
19007 Wyndfield Creek Parkway
Huntersville, NC 28078
Date Received: _____ Check Number: _____ Amount: _____ Date Date Processed to Secretary: _____
Version: 10/1/2009 ©2009 THE MARS-Mecklenburg Amateur Radio Society, Inc.

RadioGram vs ICS-213 – Who wins ?

Why are we hearing more "213 messages" on the air lately ? **A**merican **R**adio **R**elay **L**eague Ham radio operators still relay RadioGrams, and have done so for about 100 years. The **I**ncident **C**ommand **S**ystem has evolved mostly during the past 10 years and the ICS213 is their specified standard format for all emergency operation communications. As Ham radio operators, I think we should get comfortable handling both formats.

The standard ICS213 message form is used by many different agencies working on the same incident which may scale up or scale down to various levels. The message content of all messages is available to all agencies working on the incident thereby attempting to achieve adequate overall communications, a most important part of any disaster response. The mode of message transmission is not specified but most often it is typed into a computer format, sent digitally, then received at a computer screen or printer. In a "real" incident all communication messages end up in a common "big bit file", saved for posterity in a computer (barring a nuclear implosion) where they could even be investigated by some congressional committee many years from now.

The ICS213 has some elements which are not in a RadioGram. The *Position* fields (both receiver and sender positions) are more important than a person's name. In the ICS, all positions are given standard titles and during the life of an incident, people filling various positions will probably change but those position titles won't. *Date* and *Time* fields can put the messages in order (just be aware of time zones, EST or EDT might also be in order). Plain *English* is enforced because a word, acronym, or code, might have a different meaning to a different agency. To a non-Ham, an ARL numbered message or a "Q" code abbreviation has no meaning, or worse, could cause confusion. For the non-Ham a callsign in a *name* field would probably be too much information. When plain English is used I've noticed that people get very wordy which makes messages more difficult to relay using voice or CW via radio. People seem to prefer to type a message one time then have the computers do the sending and receiving (tell me how that's going to work when the infrastructure is under attack and All Else does Fail.)

A RadioGram has information not found in the ICS213. Some elements of a RadioGram are not understood or are insignificant to the non-Ham who is typing or reading a message at a computer. The sequence number, originating station callsign, handling instructions, priority code, word check count, destination address and/or telephone number, are all elements not in a 213 message format. They are useful however when relaying volumes of traffic from one individual to another. Can you imagine trying to deliver a piece of traffic to someone having just a name, and without having an address or phone number?

ARL numbered message texts and "Q" signs reduce message length, but should only be used between Hams handling traffic or Hams having a definition list close by, not for public consumption. If you're delivering a piece of traffic to someone not a Ham, always expand the numbered message or "Q" abbreviations. The handling instruction code gives options for message delivery, the word check increases the accuracy of the relayed message content. A RadioGram usually goes to a general public person on any occasion, while the ICS213 goes to a position name during a disaster response incident.

Sometimes to bridge the gap between a RadioGram and an ICS213, an operator note at the end of the ICS213 message text section can be added like a post script [op note: sequence ##, check ##]. When used with the other fields of the 213, we have the necessary information originating from the RadioGram.

So let's not lose the ability to pass RadioGram traffic, hopefully we will be relaying messages most of the time without a disaster response in progress. On the other hand, if we smoothly relay ICS213 messages we can still do what we've always done in times of disaster; we can provide that link when parts of an infrastructure are gone. We can use a format understood by disaster workers who are forced to communicate without that infrastructure. Using the ICS213 format we won't have to translate some of our language to people who don't want to be concerned about how we talk with each other on the air. Yeah more stuff to learn, but let's get comfortable using either the ICS213 or the RadioGram, whichever is better suited for the occasion.

WB2NHQ

MARS Club Meeting 02-28-2012

MARS CLUB MEETING 2/28/12

The meeting was called to order by Andy – K4GKK at 7:30PM
There was no speaker but several members provided updates on upcoming events and club activities.

Visitors:
Tom Moore, K4DRV
Bob Teague, WA4RT

Robert Smith, KK4GRY is a new licensee

Ben – WB2RHM reported that he has performed a software and hardware upgrade to the Orion in the club room. Ben also reported that the automatic tuner had been repaired by Ten Tec. Ben will provide a copy of the Orion owner's manual and leave it in the club room. All members must read and be familiar with the owner's manual before operating the Orion.

John Eigenbrode, W3SA will be teaching a licensing class sometime in the future.

Mary Hunt, N4MH reported that the MS Challenge Walk will be held March 2 – 5 in Charleston and Rest Stop volunteers are still needed.

Mary also reported that there will again be an opportunity for club members working the Hamfest to sell personal equipment. Equipment can be placed on the table after 1:00 PM Friday. Jeff, KA4WYC reported that yellow jacket slots were still open and that door watchers and ticket takers are especially needed.

Sandra Jones, KK4DAW is the new newsletter editor and encouraged club members to submit articles for the monthly newsletter.

John White, WB2NHQ reported two upcoming ARES events:

(1) The Catawba Nuclear Evacuation Exercise on April 17, 2012. Many local and federal officials with an interest in ham radio will be observing and this will be a FEMA graded exercise. The 146.94 repeater will be the primary repeater and PACTOR will be a mode used for the first time.

(2) Democratic National Convention. Limited information is being provided for security purposes. ARES to be on standby the entire week for potential deployment to the Incident Command Center if situations warrant. John encouraged any ham interested in preparing for potential participation to review the following required FEMA courses: IS-100, IS-200, IS-700 and IS-800. These courses can be found on FEMA's website at www.training.fema.gov

MARS Club Meeting 02-28-2012

Bryan Ferdinand, K4NET from the repeater committee reported that the repeater equipment (other than 220 repeater) was being replaced using CCTA cycling money and current funds in the repeater budget. Committee plans to buy a spare VHF repeater to be used as a backup repeater if needed. Bryan also reported that the 444.600 repeater is on Echolink. Bryan also asked that members notify him via email at hamk4net@gmail.com if clock or other repeater problems are noticed.

Bryan also reported that the 444.600 and 146.94 repeaters now have the 118.8 tone. Repeater committee is also looking into having a weather alert signal broadcast over repeater at some point in the future. Finally, Bryan reminded members of the following nets:
Sunday 8PM net on 147.505 hosted by Fred, AJ4CN
Nightly net at 9PM on 146.94
Thursday 8PM net on 224.400

The meeting was adjourned at approximately 9:00PM

Submitted by Kevin Keyes – K4YYD
Secretary MARS

MARS Board Meeting 03-06-2012

Minutes for Board Meeting of March 6, 2012

1. Meeting called to order at 6:30 pm.
   Attendees included Andy Hawkins – K4GKK; John White – WB2NHQ; Tom Hunt – KA3VVJ
   Kevin Keyes – K4YYD; Dave Holbrook – KC4YPB; Bryan Ferdinand – K4NET
   George Hohas - W4GEH; Barry May – KC4SSS; Shelley Eaves – KJ4ATK

2. Minutes for the Board Meeting of February 7, 2012 were accepted as presented

3. Treasurer's Report:
   Tom presented the accounts report. Barry proposed to accept, seconded by Dave and approved by the Board.

4. Vice President's Report:
   Bryan will contact Seth O'Neal about offering basic training on packet radio for the March club meeting. Repeaters will be the topic of April's club meeting and Bryan plans to have a repeater opened for inspection by members. Field Day will be the primary topic for the May club meeting. The Board discussed having beginning and advanced Skywarn training for the June club meeting. If NWS unable to accommodate, plan is to contact Brad Panovich for a weather presentation. The August club meeting will be dedicated primarily to the MS 150 Bike Ride and if time permits, a software defined radio presentation.

5. Secretary's Report:
   95 total current paid members including 4 life members. 51 non-current members.
   Renewals continue to come in.

6. Committee Reports:
   Repeater Committee:
   Bryan is liaison to the repeater committee and said $8,125 is to be spent on two new 2 meter repeaters and one new 440 repeater. Board plans to sell old repeaters to help offset cost of new repeaters. Plan is to eventually have one spare 2 meter repeater and one spare controller. Bryan also advised the Board that the antenna on Spencer Mountain (145.23 repeater) is to be replaced and the current antenna will be used for packet on Spencer Mountain. Bryan also reported that the repeater committee is having difficulty in getting in touch with WBT engineer for replacement of the 145.23 repeater antenna. The Club will need to make a decision on whether it will pay the $1,000 minimum fee to replace the antenna or continue to try and work with WBT and its schedule to offset cost.

   Equipment Committee:
   Andy has the opportunity to purchase an A4-5 triband 4 element beam antenna (10, 15 & 20 meters) to replace the current Field Day beam antenna. Andy to test antenna before purchasing.

MARS Board Meeting 03-06-2012

Old Business:
John reported that he has taken each Go Box home for testing and has repaired 3 of the 4 Astron power supplies. John has also updated all of the memories and tones on all Go Box radios. The two Alinco radios are in good shape. Club needs to purchase new dual band mag mount antennas. John has tested the Kenwood D-710 for packet use. John reported that he liked the V-71A due to its simplicity and allows the use of packet and voice on the same band. Andy made a suggestion to sell the Yaesu 7100s at Hamfest and made a motion that the Club purchase two V-71A, one power supply and four mag mount antennas with option to purchase two more V-71As. Total cost of radios will be $2,000. Bryan has lead on used laptops. John will obtain four Go Boxes from American Red Cross.

New Business:
Tom reported that the bill for the phone line to control the three repeaters has risen significantly recently. Bryan will look into controlling the repeaters via other means than through telephone. Bryan will discuss this issue with the Repeater Committee and report results back to the board. Dave has a contact at the phone company and will find out of the repeater telephone lines can be re-classified as non-commercial in order to reduce the monthly phone bill.

There being no more business for the evening's meeting, the meeting was adjourned at 9:10 PM.

Submitted by Kevin Keyes, K4YYD
Secretary MARS

Club Meetings

The Mecklenburg Amateur Radio Society meets on the last Tuesday of each month at 7:30 PM

We meet at:

East Baptist Church
6850 Monroe Rd
Charlotte, NC 28212

(Next to East Mecklenburg High School, near Conference Drive)

Clubroom

Red Cross Building
2425 Park Rd, Room 023
Charlotte, NC 28203
(704) 334-3900

Club Repeaters

Send	Receive	Offset (KHz)	Autopatch
146.34	146.94	-600	Yes
144.69	145.29	-600	No
144.63	145.23	-600	No
222.8	224.4	-1600	No
449.6	444.6	+5000	No

Mecklenburg 2m Emergency Net
9:00 PM local time, daily on 146.94 (-600) featuring the ARRL Audio News feed on Sunday night.
Alternate frequencies announced

Club Officers and Board of Directors

President

Andy Hawkins, K4GKK, k4gkk@w4bfb.org

Vice President

Shelley Eaves, KJ4ATK, kj4atk@w4bfb.org

Secretary

Kevin Keyes, K4YYD, k4yyd@w4bfb.org

Treasurer

Tom Hunt, KA3VVJ, ka3vvj@w4bfb.org

Directors

Bryan Ferdinand,, K4NET, k4net@w4bfb.org

George Hohas, W4GEH, w4geh@w4bfb.org

Dave Holbrook,, KC4YPB, kc4ypb@w4bfb.org

Barry May KC4SSS, kc4sss@w4bfb.org

John White, WB2NHQ, wb2nhq@w4bfb.org

Newsletter Editor

Sandra Jones, KK4DAW, w4bfbeditor@w4bfb.org

Mecklenburg Amateur Radio Society, Inc

Newsletter Editor:
Sandra Jones, KK4DAW
8824 Gelligum Drive
Charlotte, NC 28277

w4bfbeditor@w4bfb.org